PRODUCT DISPLAY

YD083
UNIVERSAL SWIVEL HOIST RING

YD0832
SWIVEL HOIST RING-NUT TYPE

YD081
LIFTING POINT

YDS
YDS SWIVEL HOIST RING

YD094
KEY EYE POINT

YD085
WELDED D RING

YD095
LIFTING CLUTCH FOR CONCRETE

PSA
DUPLEX STAINLESS STEEL EYE BOLT

YD088
EYE & EYE CONTACT BEARING SWIVELS

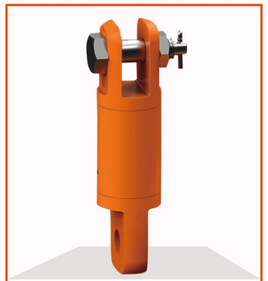

YD089
JAW & EYE CONTACT BEARING SWIVELS

YD086
JAW & JAW CONTACT BEARING SWIVELS

YD087
BULLET CONTACT BEARING SWIVELS

WARNING
Do not overload use and Install the base of the hoist ring flush to the mounting surface.

Universal Swivel Hoist Ring

YD 083

Swivel hoist ring made of special alloy steel with precision forging, it had high processing performance after special heat treatment process.

The link ring can automatically adjust the force angle with the stretching direction.Working tensile is the same in any direction, safety factor is 4:1

The surface is coated with epoxy resin, which prevent surface corrosion effectively.

The design of base hexagon, which make hoist ring to be fastening installed mount-ing object.

Different kinds of thread are available, wide range of WLL load (M8-M150, 0.3T-50T); the available thread including: Metric thread, Metric fine thread,UNC thread, UNF thread, BSW thread and so on.

Various lengths of bolts are available, also suitable for deep hole and through hole.

WARNING
Do not overload use and Install the base of the hoist ring flush to the mounting surface.

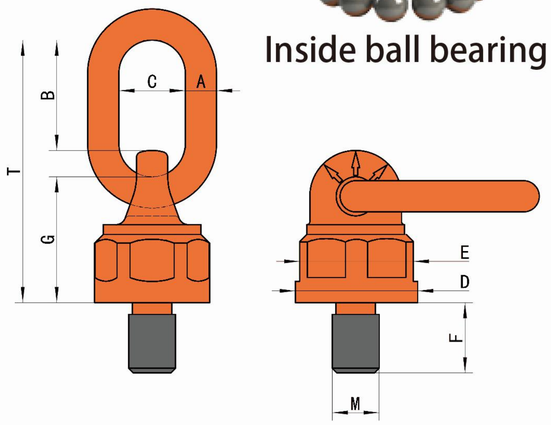

Inside ball bearing

Metric thread

ITEM NO.	WLL/T	Thread M	Dimensions/ mm F	A	B	C	D	E	G	T	Nm	Weight Kg
YD083-M8	0.4	M8×1.25-6g	12	12	44	30	40	37	46	98	10-40	0.44
YD083-M10	0.6	M10×1.5-6g	19	12	44	30	40	37	46	98	10-40	0.45
YD083-M12S	0.7	M12×1.75-6g	19	12	44	30	40	37	46	98	15-40	0.45
YD083-M14	1.25	M14×2.0-6g	31.8	12	44	30	40	37	46	98	30-100	0.45
YD083-M16S	1.5	M16×2.0-6g	31.8	12	44	30	40	37	46	98	45-130	0.48
YD083-M12B	1.05	M12×1.75-6g	19	16	56.5	34	59	54.5	64.5	134.5	15-40	1.15
YD083-M16B	1.9	M16×2.0-6g	30	16	56.5	34	59	54.5	64.5	134.5	45-130	1.35
YD083-M18S	1.9	M18×2.5-6g	30	16	56.5	34	59	54.5	64.5	134.5	100-170	1.35
YD083-M20S	2	M20×2.5-6g	30	16	56.5	34	59	54.5	64.5	134.5	100-170	1.4
YD083-M22S	2	M22×2.5-6g	30	16	56.5	34	59	54.5	64.5	134.5	100-170	1.4
YD083-M24S	3.15	M24×3.0-6g	30	16	56.5	34	59	54.5	64.5	134.5	190-280	1.4
YD083-M18B	2	M18×2.5-6g	38.1	20	67	40	70	64.3	76	160	100-170	2.3
YD083-M20B	2.5	M20×2.5-6g	38.1	20	67	40	70	64.3	76	160	100-170	2.3
YD083-M22B	2.5	M22×2.5-6g	38.1	20	67	40	70	64.3	76	160	100-170	2.35
YD083-M24B	4	M24×3.0-6g	38.1	20	67	40	70	64.3	76	160	190-280	2.35
YD083-M27	4	M27×3.0-6g	38.1	20	67	40	70	64.3	76	160	250-500	2.35
YD083-M30S	5	M30×3.5-6g	35	20	67	40	70	64.3	76	160	270-600	2.5
YD083-M30B	6	M30×3.5-6g	50	22	95	51	79	74	91	206	270-600	3.75
YD083-M33	7.5	M33×3.5-6g	50	22	95	51	79	74	91	206	270-600	3.8
YD083-M36	10	M36×4.0-6g	54	22	95	51	79	74	91	206	270-600	3.9
YD083-M39	10	M39×4.0-6g	58	22	95	51	79	74	91	206	350-800	4
YD083-M42	13	M42×4.5-6g	63	26	108	65	93	85	100.5	230.5	350-800	5.9
YD083-M45	13	M45×4.5-6g	68	26	108	65	93	85	100.5	230.5	350-800	6
YD083-M48	14	M48×5.0-6g	68	26	108	65	93	85	100.5	230.5	350-800	6.15
YD083-M52	20	M52×5.0-6g	84	32	120	70	105	95	132	278	350-900	10
YD083-M56	20	M56×5.5-6g	84	32	120	70	105	95	132	278	350-900	10
YD083-M60	20	M60×5.5-6g	90	32	120	70	105	95	132	278	350-900	10.5
YD083-M64	20	M64×6.0-6g	95	32	120	70	105	95	132	278	500-1000	10.7

★ safety factor: 4:1, B=Big size, S= Small size

Available on demand for choose of standard metric thread, metric fine thread, UNC,UNF thread, BSW(British standard Whitworth thread) and so on.

Load style										
Number of pieces	1	2	1	2	2		2	3-4		3-4
Inclination angle	0°	0°	90°	90°	0-45°	45-60°	Asymmetry	0-45°	45-60°	Asymmetry
ITEM NO. Thread M	WLL / T									
YD083-M8 8	0.6	1.2	0.4	0.8	0.6	0.4	0.4	0.8	0.6	0.4
YD083-M10 10	0.9	1.8	0.6	1.2	0.8	0.6	0.6	1.3	0.9	0.6
YD083-M12S 12	1.2	2.4	0.7	1.4	1.0	0.7	0.7	1.5	1.1	0.7
YD083-M14 14	2	4	1.25	2.5	1.8	1.3	1.3	2.6	1.9	1.3
YD083-M16S 16	2.6	5.2	1.5	3	2.1	1.5	1.5	3.2	2.3	1.5
YD083-M12B 12	1.6	3.2	1.05	2.1	1.5	1.1	1.1	2.2	1.6	1.1
YD083-M16B 16	3	6	1.9	3.8	2.7	1.9	1.9	4	2.9	1.9
YD083-M18S 18	3	6	1.9	3.8	2.7	1.9	1.9	4	2.9	1.9
YD083-M20S 20	3.5	7	2	4	2.8	2	2	4.2	3	2
YD083-M22S 22	3.5	7	2	4	2.8	2	2	4.2	3	2
YD083-M24S 24	5	10	3.15	6.3	4.4	3.2	3.2	6.6	4.7	3.2
YD083-M18B 18	3.6	7.2	2	4	2.8	2	2	4.2	3	2
YD083-M20B 20	4	8	2.5	5	3.5	2.5	2.5	5.3	3.8	2.5
YD083-M22B 22	4	8	2.5	5	3.5	2.5	2.5	5.3	3.8	2.5
YD083-M24B 24	7	14	4	8	5.6	4	4	8.4	6	4
YD083-M27 27	7	14	4	8	5.6	4	4	8.4	6	4
YD083-M30S 30	7	14	5	10	7	5	5	10.5	7.5	5
YD083-M30B 30	10	20	6	12	8.4	6	6	12.6	9	6
YD083-M33 33	15	30	7.5	15	10.5	7.5	7.5	15.8	11.3	7.5
YD083-M36 36	15	30	10	20	14	10	10	21	15	10
YD083-M39 39	15	30	10	20	14	10	10	21	15	10
YD083-M42 42	17	34	13	26	18.2	13	13	27.3	19.5	13
YD083-M45 45	17	34	13	26	18.2	13	13	27.3	19.5	13
YD083-M48 48	18	36	14	28	19.6	14	14	29.4	21	14
YD083-M52 52	25	50	20	40	28	20	20	42	30	20
YD083-M56 56	28	56	20	40	28	20	20	42	30	20
YD083-M60 60	28	56	20	40	28	20	20	42	30	20
YD083-M64 64	28	56	20	40	28	20	20	42	30	20

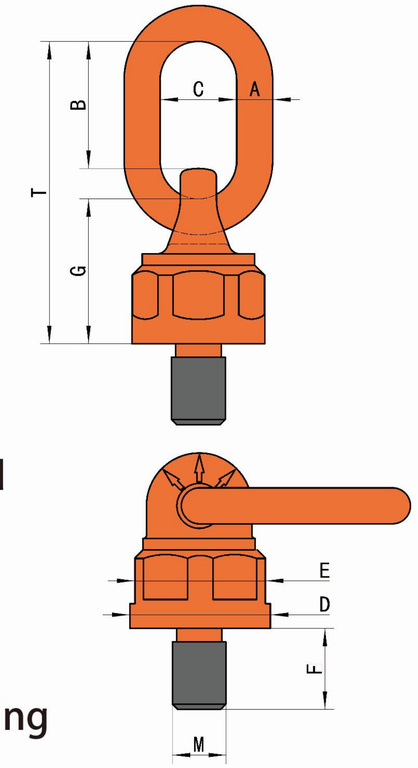

Metric thread

ITEM NO.	WLL/T	Thread M	Dimensions/ mm F	A	B	C	D	E	G	T	Nm	Weight Kg
YD083-M72S	25	M72×6.0-6g	108	40	125	80	158	142	174	339	500-1200	23
YD083-M80S	30	M80×6.0-6g	120	40	125	80	158	142	174	339	500-1200	24
YD083-M90S	35	M90×6.0-6g	135	40	125	80	158	142	174	339	500-1500	26
YD083-M100S	35	M100×6.0-6g	135	40	125	80	158	142	174	339	500-1700	26
YD083-M72B	31.5	M72×6.0-6g	108	48	136.5	90	169	155	172.5	357.5	500-1450	34
YD083-M80B	35	M80×6.0-6g	120	48	136.5	90	169	155	172.5	357.5	500-1500	35.5
YD083-M90B	40	M90×6.0-6g	135	48	136.5	90	169	155	172.5	357.5	500-1700	37.5
YD083-M100B	40	M100×6.0-6g	135	48	136.5	90	169	155	172.5	357.5	500-1700	39
YD083-M110	50	M110×6.0-6g	135	48	136.5	90	169	155	172.5	357.5	500-1700	41
YD083-M120	50	M120×6.0-6g	135	48	136.5	90	169	155	172.5	357.5	500-1700	43
YD083-M130	50	M130×6.0-6g	135	48	136.5	90	198	155	172.5	357.5	500-1700	45
YD083-M140	50	M140×6.0-6g	135	48	136.5	90	198	155	172.5	357.5	500-1700	47
YD083-M150	50	M150×6.0-6g	135	48	136.5	90	198	155	172.5	357.5	500-1700	49.5

★ safety factor: 4:1, B=Big size, S= Small size

Available on demand for choose of standard metric thread, metric fine thread, UNC,UNF thread, BSW(British standard Whitworth thread) and so on.

⚠WARNING

Do not overload use and Install the base of the hoist ring flush to the mounting surface.

Load style										
Number of pieces		1	2	1	2	2		2	3-4		3-4
Inclination angle		0°	0°	90°	90°	0-45°	45-60°	Asymmetry	0-45°	45-60°	Asymmetry
ITEM NO.	Thread M	WLL / T									
YD083-M72S	72	31.5	63	25	50	35	25	25	52.5	37	25
YD083-M80S	80	38	76	30	60	42	30	30	63	45	30
YD083-M90S	90	40	80	35	70	49	35	35	73.5	52.5	35
YD083-M100S	100	40	80	35	70	49	35	35	73.5	52.5	35
YD083-M72B	72	40	80	31.5	63	44.1	31.5	31.5	66.2	47.3	31.5
YD083-M80B	80	40	80	35	70	49	35	35	73.5	35	35
YD083-M90B	90	45	90	40	80	56	40	40	84	40	40
YD083-M100B	100	50	100	40	80	56	40	40	84	40	40
YD083-M110	110	50	100	50	100	70	50	50	105	75	50
YD083-M120	120	50	100	50	100	70	50	50	105	75	50
YD083-M130	130	50	100	50	100	70	50	50	105	75	50
YD083-M140	140	50	100	50	100	70	50	50	105	75	50
YD083-M150	150	50	100	50	100	70	50	50	105	75	50

⚠WARNING

Do not overload use and Install the base of the hoist ring flush to the mounting surface.

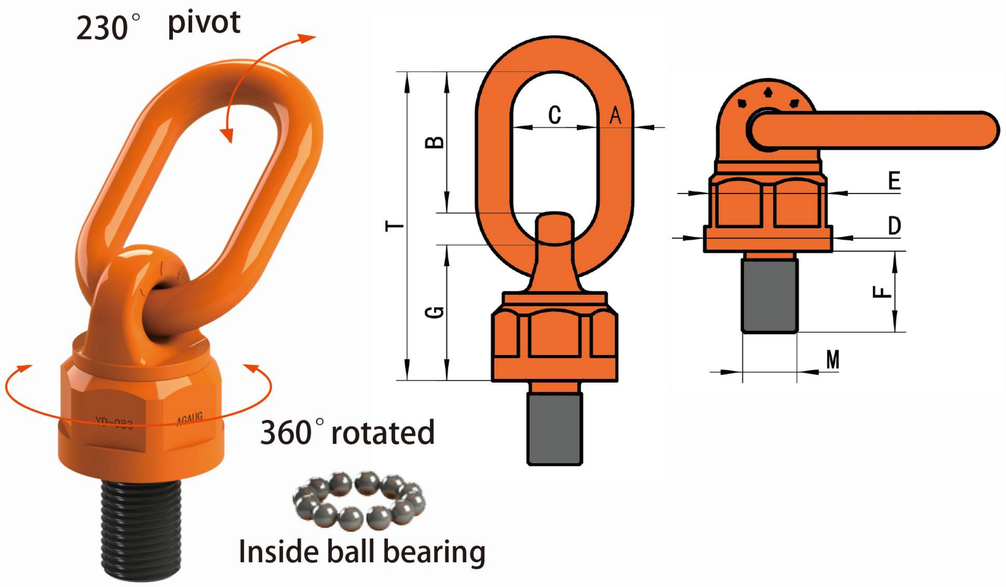

UNC Thread

ITEM NO.	WLL/T	TPI	Dimensions/ mm F	A	B	C	D	E	G	T	Nm	Weight Kg
YD083-5/16	0.4	5/16-18UNC-2A	12	12	44	30	40	37	46	98	10-40	0.5
YD083-3/8	0.6	3/8-16UNC-2A	19	12	44	30	40	37	46	98	10-40	0.5
YD083-1/2S	0.7	1/2-13UNC-2A	19	12	44	30	40	37	46	98	15-40	0.5
YD083-5/8S	1.5	5/8-11UNC-2A	31.8	12	44	30	40	37	46	98	45-130	0.5
YD083-1/2B	1.05	1/2-13UNC-2A	19	16	56.5	34	59	54.5	64.5	134.5	15-40	1.15
YD083-5/8B	1.9	5/8-11UNC-2A	30	16	56.5	34	59	54.5	64.5	134.5	45-130	1.35
YD083-3/4S	1.9	3/4-10UNC-2A	30	16	56.5	34	59	54.5	64.5	134.5	45-130	1.4
YD083-7/8S	2	7/8-9UNC-2A	30	16	56.5	34	59	54.5	64.5	134.5	100-170	1.4
YD083-1S	3.15	1-8UNC-2A	30	16	56.5	34	59	54.5	64.5	134.5	190-280	1.4
YD083-3/4B	2	3/4-10UNC-2A	38.1	20	67	40	70	64.3	76	160	45-130	2.5
YD083-7/8-B	2.5	7/8-9UNC-2A	38.1	20	67	40	70	64.3	76	160	100-170	2.5
YD083-1B	4	1-8UNC-2A	38.1	20	67	40	70	64.3	76	160	190-280	2.5
YD083-1-1/4	6	1-1/4-7UNC-2A	50	22	95	51	79	74	91	206	270-600	4
YD083-1-1/2	10	1-1/2-6UNC-2A	54	22	95	51	79	74	91	206	270-600	4
YD083-1-3/4	13	1-3/4-5UNC-2A	68	26	108	65	93	85	100.5	230.5	350-800	6
YD083-2	14	2-4.5UNC-2A	84	32	120	70	105	95	132	278	350-800	11
YD083-2-1/4	20	2-1/4-4.5UNC-2A	84	32	120	70	105	95	132	278	350-900	11
YD083-2-1/2	20	2-1/2-4UNC-2A	95	32	120	70	105	95	132	278	350-900	11
YD083-3S	25	3-4UNC-2A	108	40	125	80	158	142	174	339	500-1400	23
YD083-3-1/2S	35	3-1/2-4UNC-2A	135	40	125	80	158	142	174	339	500-1400	26
YD083-4S	35	4-4UNC-2A	135	40	125	80	158	142	174	339	500-1700	26
YD083-3B	31.5	3-4UNC-2A	108	48	136.5	90	169	155	172.5	357.5	500-1700	31
YD083-3-1/2B	40	3-1/2-4UNC-2A	135	48	136.5	90	169	155	172.5	357.5	500-1700	34
YD083-4B	40	4-4UNC-2A	135	48	136.5	90	169	155	172.5	357.5	500-1700	36.5

★ safety factor: 4:1

Available on demand for choose of standard metric thread, metric fine thread, UNC,UNF thread, BSW(British standard Whitworth thread) and so on.

Load style									
Number of pieces	1	2	1	2	2	2	3-4	3-4
Inclination angle	0°	0°	90°	90°	0-45° 45-60°	Asymmetry	0-45° 45-60°	Asymmetry
ITEM NO. / Thread TPI	WLL / T							
YD083-5/16 / 5/16	0.6	1.2	0.4	0.8	0.6	0.4	0.4	0.8	0.6	0.4
YD083-3/8 / 3/8	0.9	1.8	0.6	1.2	0.8	0.6	0.6	1.3	0.9	0.6
YD083-1/2S / 1/2	1.2	2.4	0.7	1.4	1.0	0.7	0.7	1.5	1.1	0.7
YD083-5/8S / 5/8	2.6	5.2	1.5	3	2.1	1.5	1.5	3.2	2.3	1.5
YD083-1/2B / 1/2	1.6	3.2	1.05	2.1	1.5	1.1	1.1	2.2	1.6	1.1
YD083-5/8B / 5/8	3	6	1.9	3.8	2.7	1.9	1.9	4	2.9	1.9
YD083-3/4S / 3/4	3	6	1.9	3.8	2.7	1.9	1.9	4	2.9	1.9
YD083-7/8S / 7/8	3.5	7	2	4	2.8	2	2	4.2	3	2
YD083-1S / 1	5	10	3.15	6.3	4.4	3.2	3.2	6.6	4.7	3.2
YD083-3/4B / 3/4	3.6	7.2	2	4	2.8	2	2	4.2	3	2
YD083-7/8B / 7/8	4	8	2.5	5	3.5	2.5	2.5	5.3	3.8	2.5
YD083-1B / 1	7	14	4	8	5.6	4	4	8.4	6	4
YD083-1-1/4 / 1-1/4	10	20	6	12	8.4	6	6	12.6	9	6
YD083-1-1/2 / 1-1/2	15	30	10	20	14	10	10	21	15	10
YD083-1-3/4 / 1-3/4	17	34	13	26	18.2	13	13	27.3	19.5	13
YD083-2 / 2	18	36	14	28	19.6	14	14	29.4	21	14
YD083-2-1/4 / 2-1/4	25	50	20	40	28	20	20	42	30	20
YD083-2-1/2 / 2-1/2	28	56	20	40	28	20	20	42	30	20
YD083-3S / 3	31.5	63	25	50	35	25	25	52.5	37.5	25
YD083-3-1/2S / 3-1/2	40	80	35	70	49	35	35	73.5	52.5	35
YD083-4S / 4	40	80	35	70	49	35	35	73.5	52.5	35
YD083-3B / 3	36	72	31.5	63	44.1	31.5	31.5	66.2	47.3	31.5
YD083-3-1/2-B / 3-1/2	45	90	40	80	56	40	40	84	60	40
YD083-4B / 4	50	100	40	80	56	40	40	84	60	40

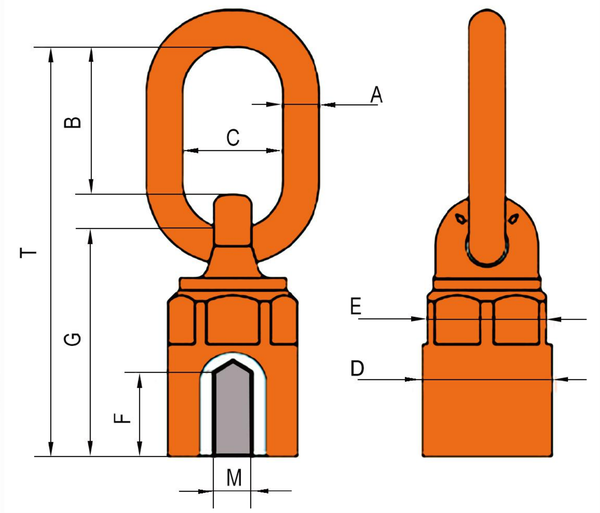

Metric thread

ITEM NO.	WLL/T	Thread M	Dimensions/ mm F	A	B	C	D	E	G	T	Weight Kg
YD0832-M8	0.4	M8×1.25-6H	15	12	44	30	40	37	68	120	0.5
YD0832-M10	0.6	M10×1.5-6H	15	12	44	30	40	37	68	120	0.5
YD0832-M12	0.7	M12×1.75-6H	15	12	44	30	40	37	68	120	0.5
YD0832-M14	1.25	M14×2.0-6H	20	12	44	30	40	37	74	126	0.5
YD0832-M16	1.5	M16×2.0-6H	20	12	44	30	40	37	74	126	0.5
YD0832-M18	2	M18×2.5-6H	25	20	67	40	70	64.3	111	195	2.5
YD0832-M20	2.5	M20×2.5-6H	25	20	67	40	70	64.3	111	195	2.5
YD0832-M22	2.5	M22×2.5-6H	25	20	67	40	70	64.3	111	195	2.5
YD0832-M24	4	M24×3.0-6H	30	20	67	40	70	64.3	111	195	2.5
YD0832-M30	6	M30×3.5-6H	40	22	95	51	79	74	144	259	4
YD0832-M33	7.5	M33×3.5-6H	40	22	95	51	79	74	144	259	4
YD0832-M36	10	M36×4.0-6H	45	22	95	51	79	74	144	259	4
YD0832-M39	10	M39×4.0-6H	45	22	95	51	79	74	144	259	4
YD0832-M42	13	M42×4.5-6H	63	26	108	65	93	85	168.5	298.5	6
YD0832-M45	13	M45×4.5-6H	68	26	108	65	93	85	176.5	306.5	6
YD0832-M48	14	M48×5.0-6H	68	26	108	65	93	85	176.5	306.5	6
YD0832-M52	20	M52×5.0-6H	84	32	120	70	105	95	228	374	11
YD0832-M56	20	M56×5.5-6H	84	32	120	70	105	95	228	374	11
YD0832-M60	20	M60×5.5-6H	90	32	120	70	105	95	235	381	11
YD0832-M64	20	M64×6.0-6H	95	32	120	70	105	95	241	387	11
YD0832-M72	31.5	M72×6.0-6H	108	48	136.5	90	169	155	289.5	474.5	31
YD0832-M80	35	M80×6.0-6H	120	48	136.5	90	169	155	294.5	479.5	32
YD0832-M90	40	M90×6.0-6H	135	48	136.5	90	169	155	330.5	515.5	34
YD0832-M100	40	M100×6.0-6H	135	48	136.5	90	169	155	330.5	515.5	36.5

★ safety factor: 4:1

Available on demand for choose of standard metric thread, metric fine thread, UNC,UNF thread, BSW(British standard Whitworth thread) and so on.

Lifting Point

YD 081

Integral die forging Lifting point made of special alloy steel with precision forging,it had high mechanical performance after special heat treatment process.

Working tensile is the same in any direction, safety factor is 4:1.

The surface is coated with epoxy resin, which prevent surface corrosion effectively.

Different kinds of thread are available, wide range of WLL load(M8-M150,0.3T-50T);the available thread including:Metric thread, Metric fine thread, UNC thread,UNF thread,BSW thread and so on.

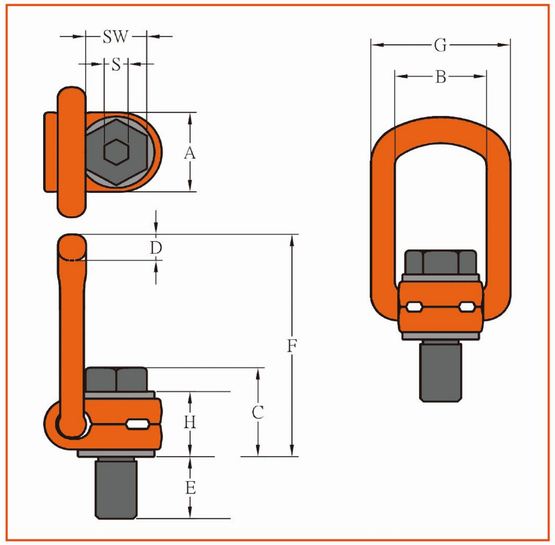

Metric thread

ITEM NO.	WLL/T	M	Dimensions/ mm										Nm	Weight Kg
			E	A	B	C	D	F	G	H	S	SW		
YD081-M8	0.3	M 8×1.25-6g	11	34	37	42	14	98.5	57	36	6	13	30	0.5
YD081-M10	0.63	M10×1.5-6g	16	34	37	44	14	98.5	57	36	6	16	60	0.5
YD081-M12	1	M12×1.75-6g	18	34	37	45	14	98.5	57	36	8	18	100	0.5
YD081-M14	1.2	M14×2.0-6g	21	34	37	46	14	98.5	57	36	10	21	120	0.5
YD081-M16	1.5	M16×2.0-6g	24	34	37	48	14	98.5	57	36	10	24	150	0.5
YD081-M18	2	M18×2.5-6g	26	50	54	57	16.5	143	82	44	12	27	200	1.5
YD081-M20	2.5	M20×2.5-6g	30	50	54	58	16.5	143	82	44	12	30	250	1.5
YD081-M22	3	M22×2.5-6g	30	50	54	60	16.5	143	82	44	12	34	300	1.5
YD081-M24	4	M24×3.0-6g	36	50	54	61	16.5	143	82	44	14	36	400	1.5
YD081-M27	4	M27×3.0-6g	38	60	65	80	22	170	99	62	17	41	400	3
YD081-M30	5	M30×3.5-6g	48	60	65	82	22	170	99	62	17	46	500	3.5
YD081-M33	6	M33×3.5-6g	54	60	65	85	22	174	99	60	22	55	600	3.5
YD081-M36S	7	M36×4.0-6g	54	60	65	85	22	174	99	60	22	55	700	3.5
YD081-M36B	8	M36×4.0-6g	62	77	85	104	27	226.5	123	79	22	55	800	6
YD081-M39	8	M39×4.0-6g	62	77	85	104	27	226.5	123	79	22	55	800	6
YD081-M42S	10	M42×4.5-6g	72	77	85	106	27	226.5	123	79	22	65	1000	6.5
YD081-M42B	15	M42×4.5-6g	63	95	104	117	36	257.5	158	90	22	65	1500	11
YD081-M45	15	M45×4.5-6g	63	95	104	117	36	257.5	158	90	22	65	1600	11
YD081-M48	20	M48×5.0-6g	72	95	104	120	36	257.5	158	90	27	75	2000	12
YD081-M52	20	M52×5.0-6g	72	95	104	120	36	257.5	158	90	27	75	2000	12
YD081-M56	22	M56×5.5-6g	84	95	104	117	36	257.5	158	90	27	85	2100	15
YD081-M64	22.5	M64×6.0-6g	100	114	104	138	36	264.5	158	103	32	95	2200	16.3

★ safety factor: 4:1, B=Big size, S= Small size

Available on demand for choose of standard metric thread, metric fine thread, UNC,UNF thread, BSW(British standard Whitworth thread) and so on.

load style

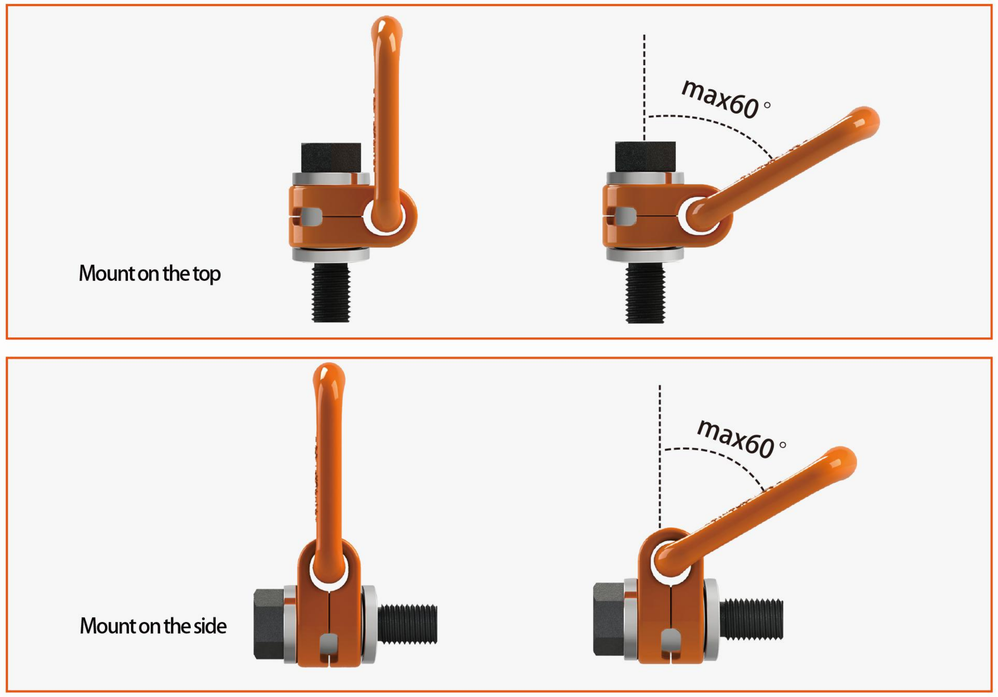

Load style										
Number of pieces		1	2	1	2	2	2	3-4	3-4	
Inclination angle		0°	0°	90°	90°	0-45°	45-60°	Asymmetry	0-45°	45-60°	Asymmetry
ITEM NO.	Thread M	WLL / T								
YD081-M8	8	0.3	0.6	0.3	0.6	0.42	0.3	0.3	0.63	0.45	0.3
YD081-M10	10	0.63	1.26	0.63	1.26	0.88	0.63	0.63	1.32	0.95	0.63
YD081-M12	12	1	2	1	2	1.4	1	1	2.1	1.5	1
YD081-M14	14	1.2	2.4	1.2	2.4	1.7	1.2	1.2	2.5	1.8	1.2
YD081-M16	16	1.5	3	1.5	3	2.1	1.5	1.5	3.1	2.2	1.5
YD081-M18	18	2	4	2	4	2.8	2	2	4.2	3	2
YD081-M20	20	2.5	5	2.5	5	3.5	2.5	2.5	5.2	3.7	2.5
YD081-M22	22	3	6	3	6	4.2	3	3	6.3	4.5	3
YD081-M24	24	4	8	4	8	5.6	4	4	8.4	6	4
YD081-M27	27	4	8	4	8	5.6	4	4	8.4	6	4
YD081-M30	30	5	10	5	10	7	5	5	10.5	7.5	5
YD081-M33	33	6	12	6	12	8.5	6	6	12.7	9	6
YD081-M36S	36	7	14	7	14	9.8	7	7	14.7	10.5	7
YD081-M36B	36	8	16	8	16	11.2	8	8	16.8	12	8
YD081-M39	39	8	16	8	16	11.2	8	8	16.8	12	8
YD081-M42S	42	10	20	10	20	14	10	10	21	15	10
YD081-M42B	42	15	30	15	30	21	15	15	31.5	22.5	15
YD081-M45	45	15	30	15	30	21	15	15	31.5	22.5	15
YD081-M48	48	20	40	20	40	28	20	20	42	30	20
YD081-M52	52	20	40	20	40	28	20	20	42	30	20
YD081-M56	56	22	44	22	44	30.8	22	22	46.2	33	22
YD081-M64	64	22.5	45	22.5	45	31.5	22.5	22.5	47.25	33.75	22.5

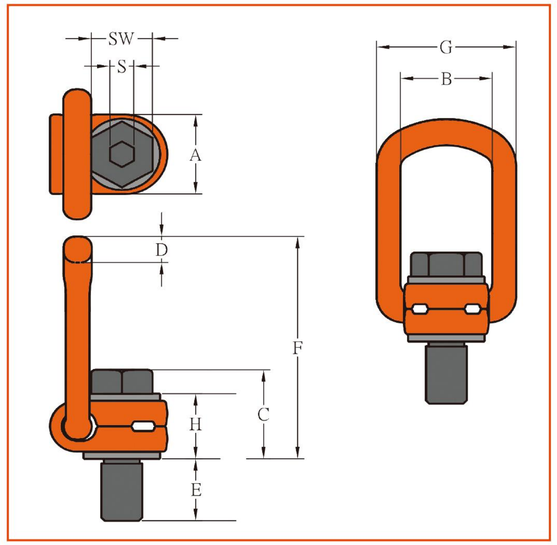

UNC Thread

ITEM NO.	WLL/T	Thread TPI	Dimensions/ mm E	A	B	C	D	F	G	H	S	SW	Nm	Weight Kg
YD081-5/16	0.3	5/16-18UNC-2A	11	34	37	42	14	98.5	57	36	6	13	30	0.5
YD081-3/8	0.63	3/8-16UNC-2A	16	34	37	44	14	98.5	57	36	6	16	60	0.5
YD081-7/16	1	7/16-14UNC-2A	18	34	37	45	14	98.5	57	36	8	18	100	0.5
YD081-1/2	1	1/2-13UNC-2A	21	34	37	46	14	98.5	57	36	10	21	120	0.5
YD081-5/8	1.5	5/8-11UNC-2A	24	34	37	48	14	98.5	57	36	10	24	150	0.5
YD081-3/4	2.5	3/4-10UNC-2A	26	50	54	58	16.5	143	82	44	12	27	200	1.5
YD081-7/8	2.5	7/8-9UNC-2A	30	50	54	58	16.5	143	82	44	12	30	250	1.5
YD081-1	4	1-8UNC-2A	36	50	54	61	16.5	143	82	44	14	36	400	1.5
YD081-1-1/4	5	1-1/4-7UNC-2A	48	60	65	80	22	174	99	60	17	46	500	3.5
YD081-1-1/2	8	1-1/2-6UNC-2A	62	77	85	104	27	226.5	123	79	22	55	800	6
YD081-1-3/4	15	1-3/4-5UNC-2A	63	95	104	116	36	257.5	158	90	22	65	1500	11
YD081-2	20	2-4.5UNC-2A	72	95	104	112	36	257.5	158	82	27	75	2000	12

★ safety factor: 4:1

Available on demand for choose of standard metric thread, metric fine thread, UNC,UNF thread, BSW(British standard Whitworth thread) and so on.

Load style											
Number of pieces		1	2	1	2	2		2	3-4		3-4
Inclination angle		0°	0°	90°	90°	0-45°	45-60°	Asymmetry	0-45°	45-60°	Asymmetry
ITEM NO.	Thread TPI	WLL / T									
YD081-5/16	5/16	0.3	0.6	0.3	0.6	0.42	0.3	0.3	0.63	0.45	0.3
YD081-3/8	3/8	0.63	1.26	0.63	1.26	0.88	0.63	0.63	1.32	0.95	0.63
YD081-7/16	7/16	1	2	1	2	1.4	1	1	2.1	1.5	1
YD081-1/2	1/2	1	2	1	2	1.4	1	1	2.1	1.5	1
YD081-5/8	5/8	1.5	3	1.5	3	2.1	1.5	1.5	3.1	2.2	1.5
YD081-3/4	3/4	2.5	5	2.5	5	3.5	2.5	2.5	5.2	3.7	2.5
YD081-7/8	7/8	2.5	5	2.5	5	3.5	2.5	2.5	5.2	3.7	2.5
YD081-1	1	4	8	4	8	5.6	4	4	8.4	6	4
YD081-1-1/4	1-1/4	5	10	5	10	7	5	5	10.5	7.5	5
YD081-1-1/2	1-1/2	8	16	8	16	11.2	8	8	16.8	12	8
YD081-1-3/4	1-3/4	15	30	15	30	21	15	15	31.5	22.5	15
YD081-2	2	20	40	20	40	28	20	20	42	30	20

Key Eye Point

Fit out key wrench for easy mount the lifting point on object

Key Eye Point *YD 094*

Point body is finished with Epoxy coating for improved corrosion resistance.

At right lifting position and installation condition it has larger WLL than DIN 580. According EN 1677 standard.

Eye type swivel hoist ring have choose special alloy steel forging and High Strength Quenched and tempered after treatment.it has superior mechanical property

After bolt locking, the ring body can rotate 360 degrees. In the case of multi limb lifting sling,ring body parts can be automatically adjusted with the direction of tensile stress angle. Every direction have 4 times safety factor.

Available on demand for WLL range (M8-M48,0.3-20T) choose of standard metric thread, metric fine thread ,UNC UNF thread,BSW (British standard Whitworth thread) and so on. Multiple bolt lengths available to meet specific application requirement for long or through hole.

WARNING

Do not overload use and Install the base of the hoist ring flush to the mounting surface.

WITH KEY WRENCH

360° rotated

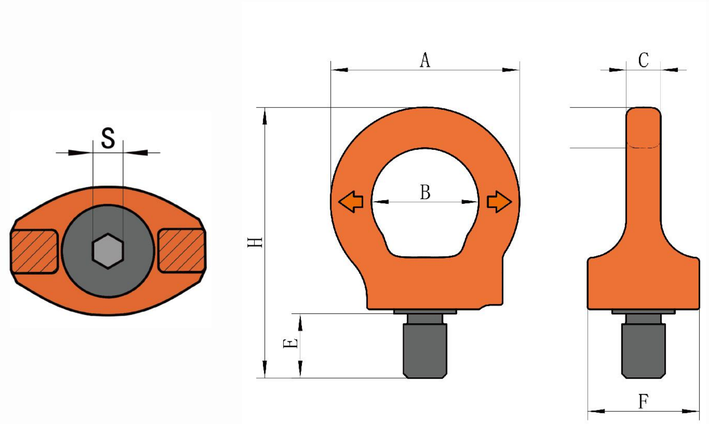

Metric thread

ITEM NO.	WLL/T	Thread M	Dimensions mm								Nm	Weight Kg
			E	A	B	C	D	F	H	S		
YD094-M8	0.3	M8×1.25-6g	12	44	25	8	9.5	26	61.5	6	10	0.15
YD094-M10	0.4	M10×1.5-6g	15	44	25	8	9.5	26	64.5	6	10	0.15
YD094-M12	0.75	M12×1.75-6g	18	52	30	10	11	32	76	8	10	0.2
YD094-M14	0.75	M14×2.0-6g	18	52	30	10	11	32	76	8	20	0.2
YD094-M16	1.5	M16×2.0-6g	24	61	35	14	13	39	91	10	30	0.35
YD094-M18	1.5	M18×2.5-6g	24	61	35	14	13	39	91	10	40	0.35
YD094-M20	2.3	M20×2.5-6g	30	70	40	16	15	47	108	12	70	0.6
YD094-M22	2.3	M22×2.5-6g	30	70	40	16	15	47	108	12	80	0.6
YD094-M24	3.2	M24×3.0-6g	36	84	48	19	18	55	127	14	150	1
YD094-M27	3.2	M27×3.0-6g	36	84	48	19	18	55	127	14	200	1
YD094-M30	4.5	M30×3.5-6g	45	105	60	24	22.5	67	159	17	350	2
YD094-M33	4.5	M33×3.5-6g	45	105	60	24	22.5	67	159	17	350	2
YD094-M36	7	M36×4.0-6g	54	126	72	29	27	85	195	22	410	3
YD094-M42	9	M42×4.5-6g	63	147	82	34	32.5	98	225.5	22	550	5
YD094-M48	12	M48×5.0-6g	72	168	96	38	36	114	259	27	550	7.5

★ safety factor: 4:1

Available on demand for choose of standard metric thread, metric fine thread, UNC,UNF thread, BSW(British standard Whitworth thread) and so on.

WARNING

Do not overload use and Install the base of the hoist ring flush to the mounting surface.

load style

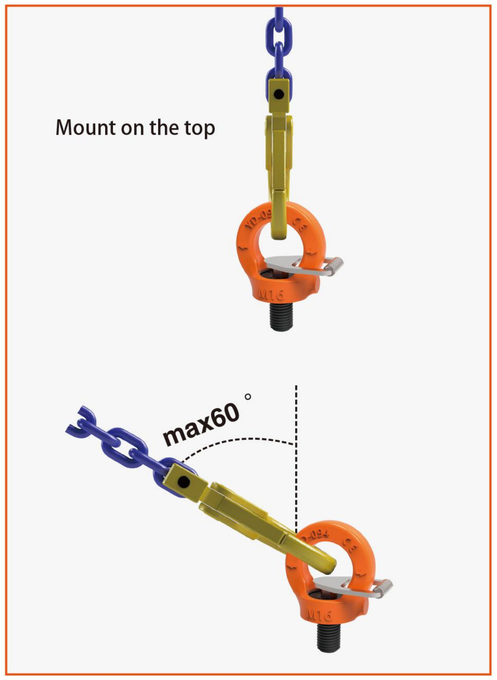

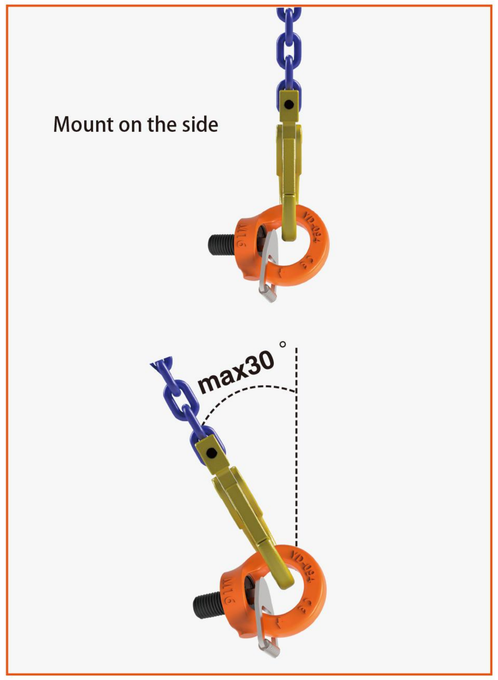

Load style											
Number of pieces		1	2	1	2	2		2	3-4		3-4
Inclination angle		0°	0°	90°	90°	0-45°	45-60°	Asymmetry	0-45°	45-60°	Asymmetry
ITEM NO.	Thread M	WLL / T									
YD094-M8	8	1	2	0.3	0.6	0.42	0.3	0.3	0.63	0.45	0.3
YD094-M10	10	1	2	0.4	0.8	0.56	0.4	0.4	0.8	0.6	0.4
YD094-M12	12	2	4	0.75	1.5	1	0.75	0.75	1.5	1.1	0.75
YD094-M14	14	2	4	0.75	1.5	1	0.75	0.75	1.5	1.1	0.75
YD094-M16	16	4	8	1.5	3	2.1	1.5	1.5	3.1	2.2	1.5
YD094-M18	18	4	8	1.5	3	2.1	1.5	1.5	3.1	2.2	1.5
YD094-M20	20	6	12	2.3	4.6	3.2	2.3	2.3	4.8	3.4	2.3
YD094-M22	22	6	12	2.3	4.6	3.2	2.3	2.3	4.8	3.4	2.3
YD094-M24	24	8	16	3.2	6.4	4.5	3.2	3.2	6.7	4.8	3.2
YD094-M27	27	8	16	3.2	6.4	4.5	3.2	3.2	6.7	4.8	3.2
YD094-M30	30	12	24	4.5	9	6.3	4.5	4.5	9.4	6.7	4.5
YD094-M33	33	12	24	4.5	9	6.3	4.5	4.5	9.4	6.7	4.5
YD094-M36	36	16	32	7	14	9.8	7	7	14.7	10.5	7
YD094-M42	42	24	48	9	18	12.6	9	9	18.9	13.5	9
YD094-M48	48	32	64	12	24	16.8	12	12	25	18	12

⚠WARNING
Do not overload use and Install the base of the hoist ring flush to the mounting surface.

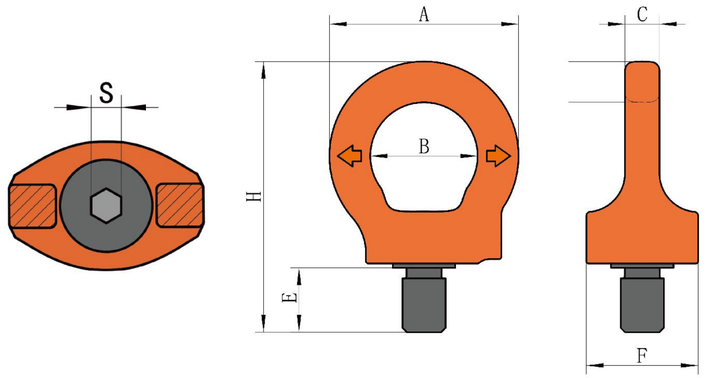

UNC Thread

ITEM NO.	WLL/T	Thread TPI	Dimensions mm								Weight Kg
			E	A	B	C	D	F	H	S	
YD094-5/16	0.3	5/16-18UNC-2A	12	44	25	8	9.5	26	61.5	6	10	0.15
YD094-3/8	0.4	3/8-16UNC-2A	15	44	25	8	9.5	26	64.5	6	10	0.15
YD094-7/16	0.75	7/16-14UNC-2A	18	52	30	10	11	32	76	8	10	0.2
YD094-1/2	0.75	1/2-13UNC-2A	18	52	30	10	11	32	76	8	10	0.2
YD094-5/8	1.5	5/8-11UNC-2A	24	61	35	14	13	39	91	10	30	0.35
YD094-3/4	2.3	3/4-10UNC-2A	30	70	40	16	15	47	108	12	70	0.6
YD094-7/8	2.3	7/8-9UNC-2A	30	70	40	16	15	47	108	12	150	0.6
YD094-1	3.2	1-8UNC-2A	36	84	48	19	18	55	127	14	150	1
YD094-1-1/4	4.5	1-1/4-7UNC-2A	45	105	60	24	22.5	67	159	17	350	2
YD094-1-1/2	7	1-1/2-6UNC-2A	54	126	72	29	27	85	195	22	410	3
YD094-1-3/4	9	1-3/4-5UNC-2A	63	147	82	34	32.5	98	225.5	22	550	5
YD094-2	12	2-4.5UNC-2A	72	168	96	38	36	114	259	27	550	7.5

★ safety factor: 4:1
Available on demand for choose of standard metric thread, metric fine thread, UNC,UNF thread, BSW(British standard Whitworth thread) and so on.

⚠WARNING
Do not overload use and Install the base of the hoist ring flush to the mounting surface.

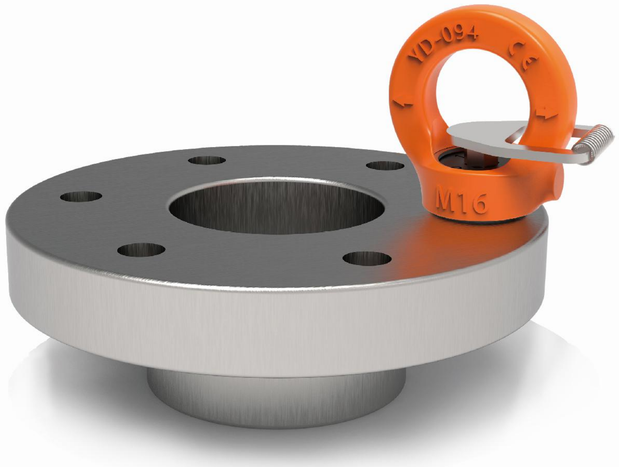

fit out key wrench for easy mount the lifting point on object

Mount on the top

Mount on the side

Load style											
Number of pieces		1	2	1	2	2		2	3-4		3-4
Inclination angle		0°	0°	90°	90°	0-45°	45-60°	Asymmetry	0-45°	45-60°	Asymmetry
ITEM NO.	Thread TPI	WLL / T									
YD094-5/16	5/16	1	2	0.3	0.6	0.42	0.3	0.3	0.63	0.45	0.3
YD094-3/8	3/8	1	2	0.4	0.8	0.56	0.4	0.4	0.8	0.6	0.4
YD094-7/16	7/16	2	4	0.75	1.5	1	0.75	0.75	1.5	1.1	0.75
YD094-1/2	1/2	2	4	0.75	1.5	1	0.75	0.75	1.5	1.1	0.75
YD094-5/8	5/8	4	8	1.5	3	2.1	1.5	1.5	3.1	2.2	1.5
YD094-3/4	3/4	6	12	2.3	4.6	3.2	2.3	2.3	4.8	3.4	2.3
YD094-7/8	7/8	6	12	2.3	4.6	3.2	2.3	2.3	4.8	3.4	2.3
YD094-1	1	8	16	3.2	6.4	4.5	3.2	3.2	6.7	4.8	3.2
YD094-1-1/4	1-1/4	12	24	4.5	9	6.3	4.5	4.5	9.4	6.7	4.5
YD094-1-1/2	1-1/2	16	32	7	14	9.8	7	7	14.7	10.5	7
YD094-1-3/4	1-3/4	24	48	9	18	12.6	9	9	18.9	13.5	9
YD094-2	2	32	64	12	24	16.8	12	12	25	18	12

WARNING

Do not overload use and Install the base of the hoist ring flush to the mounting surface.

BRIEF INTRODUCTION

Material of body and screw:Duplex Stainless Steel
High resistance against sea water and in environments with a high concentration of chlorine ions.
Widely Used to ourdoor working.
Attaching to safety sling, it applies to work at aloft.

360° rotation, adjustable in the direction of pull.
Using screw only to ensure fast installation.
Multiple bolt lengths available to meet specific application requirement for long or through hole.
hexagonal design to ensure perfectly fitted and tighten to the mounting surface with wrench tool.

Hexagonal bolt fast installation

360 degree Rotation

Mark 3 persons

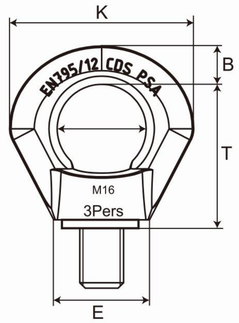

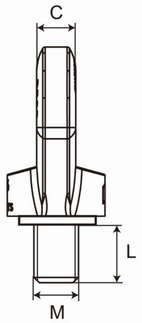

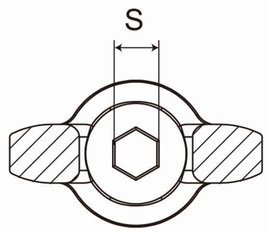

Duplex Stainless Steel Eye Bolt

MODEL	NUMBER	Dimensions/ mm								Weight Kg
		B	C	E	K	T	L	M	S	
PSA-16	3	14	14	35	67	50	24	M16X2-6g	10	0.3
PSA-16L	3	14	14	35	67	50	120	M16X2-6g	10	0.45

WARNING

Do not overload use and Install the base of the hoist ring flush to the mounting surface.

Swivel Hoist Ring

YDS

Forged ring body have choose special alloy steel forging and High Strength Quenched and tempered after treatment. It has superior mechanical property.

Hexagonal design to ensure perfectly fitted and tighten to the mounting surface with wrench tool. Stamp bolts grade and screw thread type NO.

It can be adjustable as different force direction and force angles. Point to rotate around the axis are 180°. Equal tensile force WLL on different direction and have 4 times safety factor.

Base Support is one-piece design and forged Alloy steel make lifting point have higher strength. After lock it can be 360° rotation. Every thread must be 100% pass 6G GO -NO GO FIXED GAUGES test,can be apply to Precision threaded hole.

Available on demand for WLL range (M8-M48) choose of standard metric thread, metric fine thread, UNC, UNF thread, BSW(British standard Whitwroth thread)and so on. Multiple bolt lengths available to meet specific application requirement for long or through hole.

WARNING

Do not overload use and Install the base of the hoist ring flush to the mounting surface.

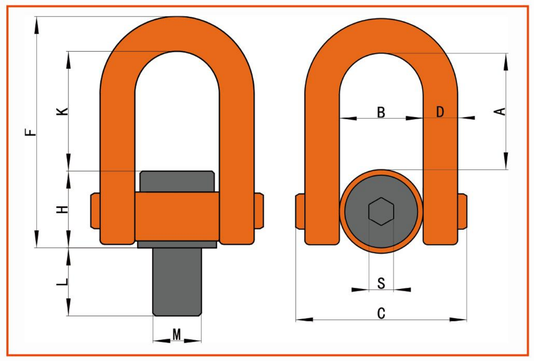

Metric thread

ITEM NO.	WLL/T	Thread M	Dimensions/ mm L	A	B	C	D	F	K	H	S	Nm	Weight Kg
YDS-M8	0.5	M 8×1.25-6g	12	50.5	37	76	14	101.5	49.5	38	8	30	0.8
YDS-M10	0.7	M10×1.5-6g	16	50.5	37	76	14	101.5	49.5	38	8	60	0.8
YDS-M12	1	M12×1.75-6g	18	50.5	37	76	14	101.5	49.5	38	8	100	0.8
YDS-M14	1.5	M14×2.0-6g	21	50.5	37	76	14	101.5	49.5	38	8	120	0.8
YDS-M16	2	M16×2.0-6g	24	50.5	37	76	14	101.5	49.5	38	8	150	0.8
YDS-M18	2.5	M18×2.5-6g	40	73	54	106	20	145	77	48	12	200	1.9
YDS-M20	3	M20×2.5-6g	40	73	54	106	20	145	77	48	12	250	2
YDS-M22	3	M22×2.5-6g	40	73	54	106	20	145	77	48	12	250	2.1
YDS-M24	4.5	M24×3.0-6g	40	73	54	106	20	145	77	48	12	400	2.5
YDS-M27	5	M27×3.0-6g	40	98.5	73	149	30	201.5	103.5	68	17	450	5.5
YDS-M30	7.3	M30×3.5-6g	45	98.5	73	149	30	201.5	103.5	68	17	500	5.5
YDS-M33	8	M33×3.5-6g	50	98.5	73	149	30	201.5	103.5	68	17	800	5.5
YDS-M36	10	M36×4.0-6g	54	98.5	73	149	30	201.5	103.5	68	17	1000	5.5
YDS-M39	10	M39×4.0-6g	58	98.5	73	149	30	201.5	103.5	68	17	1200	6
YDS-M42	12.5	M42×4.5-6g	63	98.5	73	149	30	201.5	103.5	68	17	1500	6
YDS-M45	15	M45×4.5-6g	63	98.5	73	149	30	201.5	103.5	68	17	1800	6
YDS-M48S	16	M48×5.0-6g	63	98.5	73	149	30	201.5	101.5	70	17	2000	6.5
YDS-M48B	20	M48×5.0-6g	68	120	93	182	36	249	125	84	19	2000	11.5
YDS-M52	20	M52×5.0-6g	68	120	93	182	36	249	125	84	19	2000	12
YDS-M56	25	M56×5.5-6g	78	120	93	182	36	249	125	84	19	2100	12
YDS-M60	25	M60×5.5-6g	90	120	93	182	36	253	125	88	19	2200	13
YDS-M64S	32	M64×6.0-6g	90	120	93	182	36	253	125	88	19	2200	13
YDS-M64B	33	M64×6.0-6g	100	185	144	278	58	395	195	136	36	6000	42
YDS-M72X4	35	M72×4.0-6g	110	185	144	278	58	395	195	136	36	7000	43
YDS-M72X6	35	M72×6.0-6g	110	185	144	278	58	395	195	136	36	7000	43
YDS-M80	40	M80×6.0-6g	120	185	144	278	58	395	195	136	36	8000	44.5
YDS-M90	45	M90×6.0-6g	135	185	144	278	58	395	195	136	36	9000	46.5
YDS-M100	50	M100×6.0-6g	150	185	144	278	58	395	195	136	36	10000	49

★ safety factor: 4:1

Available on demand for choose of standard metric thread, metric fine thread, UNC,UNF thread, BSW(British standard Whitworth thread) and so on.

WARNING

Do not overload use and Install the base of the hoist ring flush to the mounting surface.

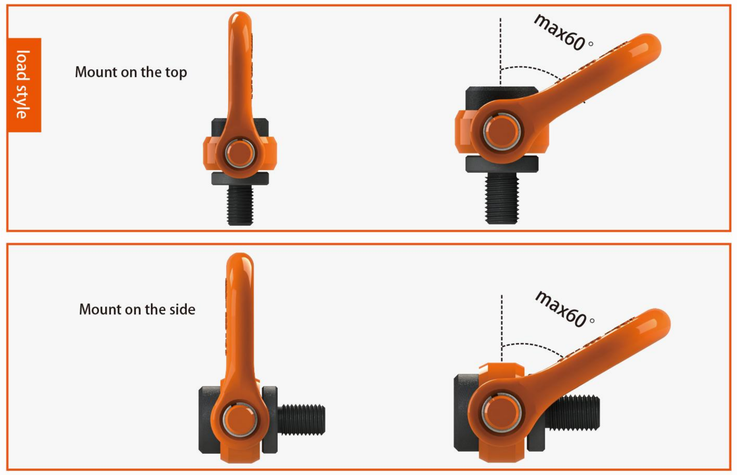

Load style											
Number of pieces		1	2	1	2	2		2	3-4		3-4
Inclination angle		0°	0°	90°	90°	0-45°	45-60°	Asymmetry	0-45°	45-60°	Asymmetry
ITEM NO.	Thread M	WLL / T									
YDS-M8	8	0.5	1	0.5	1	0.7	0.5	0.5	1.1	0.8	0.5
YDS-M10	10	0.7	1.4	0.7	1.4	1	0.7	0.7	1.5	1.1	0.7
YDS-M12	12	1	2	1	2	1.4	1	1	2.1	1.5	1
YDS-M14	14	1.5	3	1.5	3	2.1	1.5	1.5	3.15	2.3	1.5
YDS-M16	16	2	4	2	4	2.8	2	2	4.2	3	2
YDS-M18	18	2.5	5	2.5	5	3.5	2.5	2.5	5.25	3.75	2.5
YDS-M20	20	3	6	3	6	4.2	3	3	6.3	4.5	3
YDS-M22	22	3	6	3	6	4.2	3	3	6.3	4.5	3
YDS-M24	24	4.5	9	4.5	9	6.3	4.5	4.5	9.45	6.8	4.5
YDS-M27	27	4.5	9	4.5	9	6.3	4.5	4.5	9.45	6.8	4.5
YDS-M30	30	7.3	14.6	7.3	14.6	10.2	7.3	7.3	15.3	11	7.3
YDS-M33	33	8	16	8	16	11.2	8	8	16.8	12	8
YDS-M36	36	10	20	10	20	14	10	10	21	15	10
YDS-M39	39	10	20	10	20	14	10	10	21	15	10
YDS-M42	42	12.5	25	12.5	25	17.5	12.5	12.5	26.3	18.8	12.5
YDS-M45	45	15	30	15	30	21	15	15	31.5	22.5	15
YDS-M48S	48	16	32	16	32	22.4	16	16	33.5	24	16
YDS-M48B	48	20	40	20	40	28	20	20	42	30	20
YDS-M52	52	20	40	20	40	28	20	20	42	30	20
YDS-M56	56	25	50	25	50	35	25	25	53	37.5	25
YDS-M60	60	25	50	25	50	35	25	25	52.5	37.5	25
YDS-M64S	64	32	64	32	64	45	32	32	67	48	32
YDS-M64B	64	33	66	33	66	46.2	33	33	69.3	49.5	33
YDS-M72X4	72	35	70	35	70	49	35	35	73.5	52.5	35
YDS-M72X6	72	35	70	35	70	49	35	35	73.5	52.5	35
YDS-M80	80	40	80	40	80	56	40	40	84	60	40
YDS-M90	90	45	90	45	90	63	45	45	94.5	67.5	45
YDS-M100	100	50	100	50	100	70	50	50	105	75	50

WARNING
Do not overload use and Install the base of the hoist ring flush to the mounting surface.

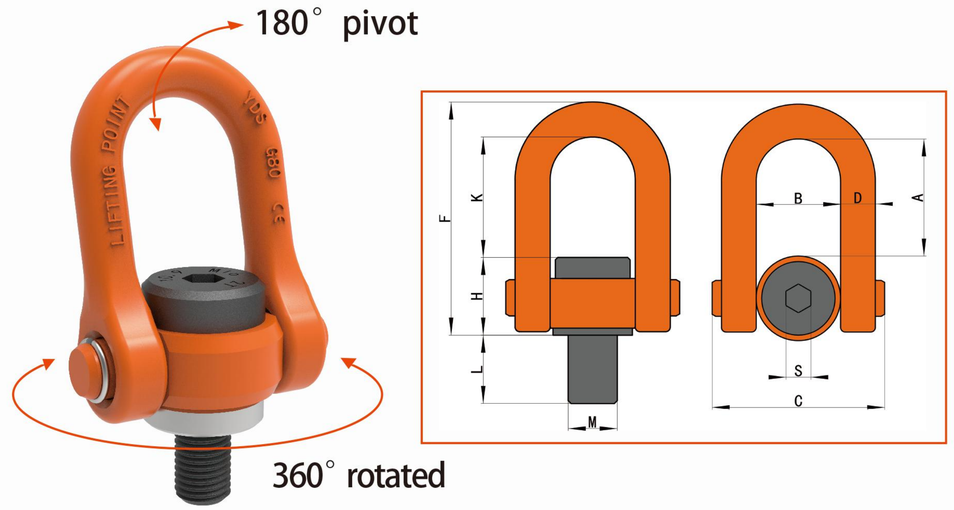

UNC Thread

ITEM NO.	WLL/T	Thread M	Dimensions/ mm L	A	B	C	D	F	K	H	S	Nm	Weight Kg
YDS-5/16	0.5	5/16-18UNC-2A	12	50.5	37	76	14	101.5	49.5	38	8	30	0.8
YDS-3/8	0.7	3/8-16UNC-2A	16	50.5	37	76	14	101.5	49.5	38	8	60	0.8
YDS-7/16	1	7/16-14UNC-2A	18	50.5	37	76	14	101.5	49.5	38	8	100	0.8
YDS-1/2	1.5	1/2-13UNC-2A	21	50.5	37	76	14	101.5	49.5	38	8	120	0.8
YDS-5/8	2	5/8-11UNC-2A	24	50.5	37	76	14	101.5	49.5	38	8	150	0.8
YDS-3/4	3	3/4-10UNC-2A	40	73	54	106	20	145	77	48	12	250	2
YDS-7/8	3	7/8-9UNC-2A	40	73	54	106	20	145	77	48	12	250	2.1
YDS-1	4.5	1-8UNC-2A	40	73	54	106	20	145	77	48	12	400	2.5
YDS-1-1/8	6	1-1/8-7UNC-2A	45	98.5	73	149	30	201.5	103.5	68	17	600	5.5
YDS-1-1/4	8	1-1/4-7UNC-2A	45	98.5	73	149	30	201.5	103.5	68	17	800	5.5
YDS-1-3/8	9	1-3/8-6UNC-2A	54	98.5	73	149	30	201.5	103.5	68	17	900	5.5
YDS-1-1/2	10	1-1/2-6UNC-2A	54	98.5	73	149	30	201.5	103.5	68	17	1000	5.5
YDS-1-3/4	15	1-3/4-5UNC-2A	63	98.5	73	149	30	201.5	103.5	68	17	1800	6
YDS-2	20	2-4.5UNC-2A	68	120	93	182	36	249	125	84	19	2000	12
YDS-2-1/4	25	2-1/4-4.5UNC-2A	78	120	93	182	36	249	125	84	19	2100	12
YDS-2-1/2	32	2-1/2-4UNC-2A	90	120	93	182	36	253	125	88	19	2200	13
YDS-2-3/4	33	2-3/4-4UNC-2A	110	186	144	278	58	395	195	136	36	6000	42.5
YDS-3	35	3-4UNC-2A	120	186	144	278	58	395	195	136	36	7000	43.5
YDS-3-1/4	40	3-1/4-4UNC-2A	120	186	144	278	58	395	195	136	36	8000	44
YDS-3-1/2	42	3-1/2-4UNC-2A	135	186	144	278	58	395	195	136	36	9000	44.5
YDS-3-3/4	45	3-3/4-4UNC-2A	150	186	144	278	58	395	195	136	36	9000	46.5
YDS-4	50	4-4UNC-2A	150	186	144	278	58	395	195	136	36	10000	49

★ safety factor: 4:1

Available on demand for choose of standard metric thread, metric fine thread, UNC,UNF thread, BSW(British standard Whitworth thread) and so on.

WARNING
Do not overload use and Install the base of the hoist ring flush to the mounting surface.

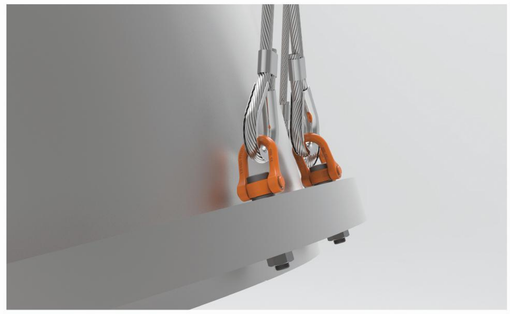

Application

Customize the length of bolt

Load style											
Number of pieces		1	2	1	2	2	2	3-4	3-4		
Inclination angle		0°	0°	90°	90°	0-45°	45-60°	Asymmetry	0-45°	45-60°	Asymmetry
ITEM NO.	Thread TPI	WLL / T									
YDS-5/16	5/16	0.5	1	0.5	1	0.7	0.5	0.5	1.1	0.8	0.5
YDS-3/8	3/8	0.7	1.4	0.7	1.4	1	0.7	0.7	1.5	1.1	0.7
YDS-7/16	7/16	1	2	1	2	1.4	1	1	2.1	1.5	1
YDS-1/2	1/2	1.5	3	1.5	3	2.1	1.5	1.5	3.15	2.3	1.5
YDS-5/8	5/8	2	4	2	4	2.8	2	2	4.2	3	2
YDS-3/4	3/4	3	6	3	6	4.2	3	3	6.3	4.5	3
YDS-7/8	7/8	3	6	3	6	4.2	3	3	6.3	4.5	3
YDS-1	1	4.5	9	4.5	9	6.3	4.5	4.5	9.45	6.8	4.5
YDS-1-1/8	1-1/8	6	12	6	12	8.4	6	6	12.6	9	6
YDS-1-1/4	1-1/4	8	16	8	16	11.2	8	8	16.8	12	8
YDS-1-3/8	1-3/8	9	18	9	18	12.6	9	9	18.9	13.5	9
YDS-1-1/2	1-1/2	10	20	10	20	14	10	10	21	15	10
YDS-1-3/4	1-3/4	15	30	15	30	21	15	15	31.5	22.5	15
YDS-2	2	20	40	20	40	28	20	20	42	30	20
YDS-2-1/4	2-1/4	25	50	25	50	35	25	25	53	37.5	25
YDS-2-1/2	2-1/2	32	64	32	64	45	32	32	67	48	32
YDS-2-3/4	2-3/4	33	66	33	66	46.2	33	33	69.3	49.5	33
YDS-3	3	35	70	35	70	49	35	35	73.5	52.5	35
YDS-3-1/4	3-1/4	40	80	40	80	56	40	40	84	60	40
YDS-3-1/2	3-1/2	42	84	42	84	58.8	42	42	88.2	63	42
YDS-3-3/4	3-3/4	45	90	45	90	63	45	45	94.5	67.5	45
YDS-4	4	50	100	50	100	70	50	50	105	75	50

WARNING

Do not overload use and Install the base of the hoist ring flush to the mounting surface.

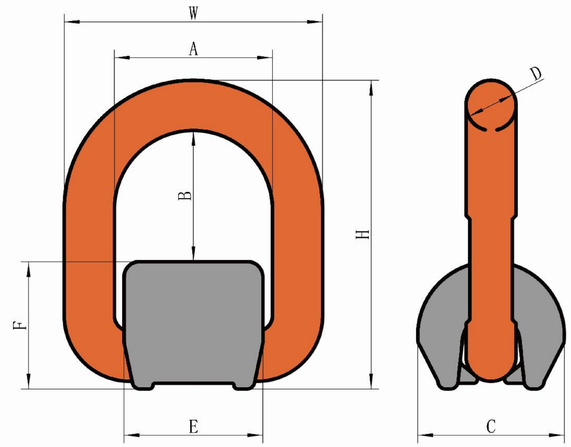

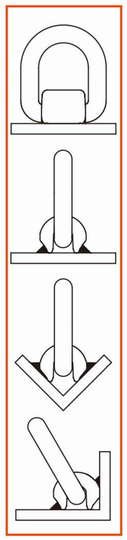

G80 Welded D Ring

ITEM NO.	WLL/T	Dimensions/ mm A	B	C	D	E	F	H	W	Weight Kg
YD085-01	1.12T	41	35	38	13	36	33	81	67	0.4
YD085-02	2T	42	41.5	40	14	38	35.5	91	70	0.47
YD085-03	3.15T	45	41.5	43	17.5	43	39	98	80	0.69
YD085-05	5.3T	54	48	60	22	50	49	119	98	1.46
YD085-08	8T	70	60	69	27	66	58	145	124	2.5
YD085-10	10T	84	81	75	28	76	62	171	140	3.2
YD085-15	15T	95	86	87	34	88	69	189	163	5.79
YD085-20	20T	147	146.5	125	46	124	88	280.5	239	15.5

★ safety factor: 4:1

Safety Information

Load style										
Number of pieces		1	2	1	2	2		2	3–4		3-4
Inclination angle		0°	0°	90°	90°	0–45°	45–60°	Asymmetry	0–45°	45–60°	Asymmetry
ITEM NO.	SIZE	WLL / T									
YD085-01	1.12T	1.12	2.24	1.12	2.24	1.6	1.12	1.12	2.3	1.68	1.12
YD085-02	2T	2	4	2	4	2.8	2	2	4.2	3	2
YD085-03	3.15T	3.15	6.3	3.15	6.3	4.4	3.15	3.15	6.6	4.7	3.15
YD085-05	5.3T	5.3	10.6	5.3	10.6	7.4	5.3	5.3	11.2	7.8	5.3
YD085-08	8T	8	16	8	16	11.2	8	8	16.8	12	8
YD085-10	10T	10	20	10	20	14	10	10	21	15	10
YD085-15	15T	15	30	15	30	21	15	15	31.5	22.5	15
YD085-20	20T	20	40	20	40	28	20	20	42	30	20

WARNING

Do not overload use and Install the base of the hoist ring flush to the mounting surface.

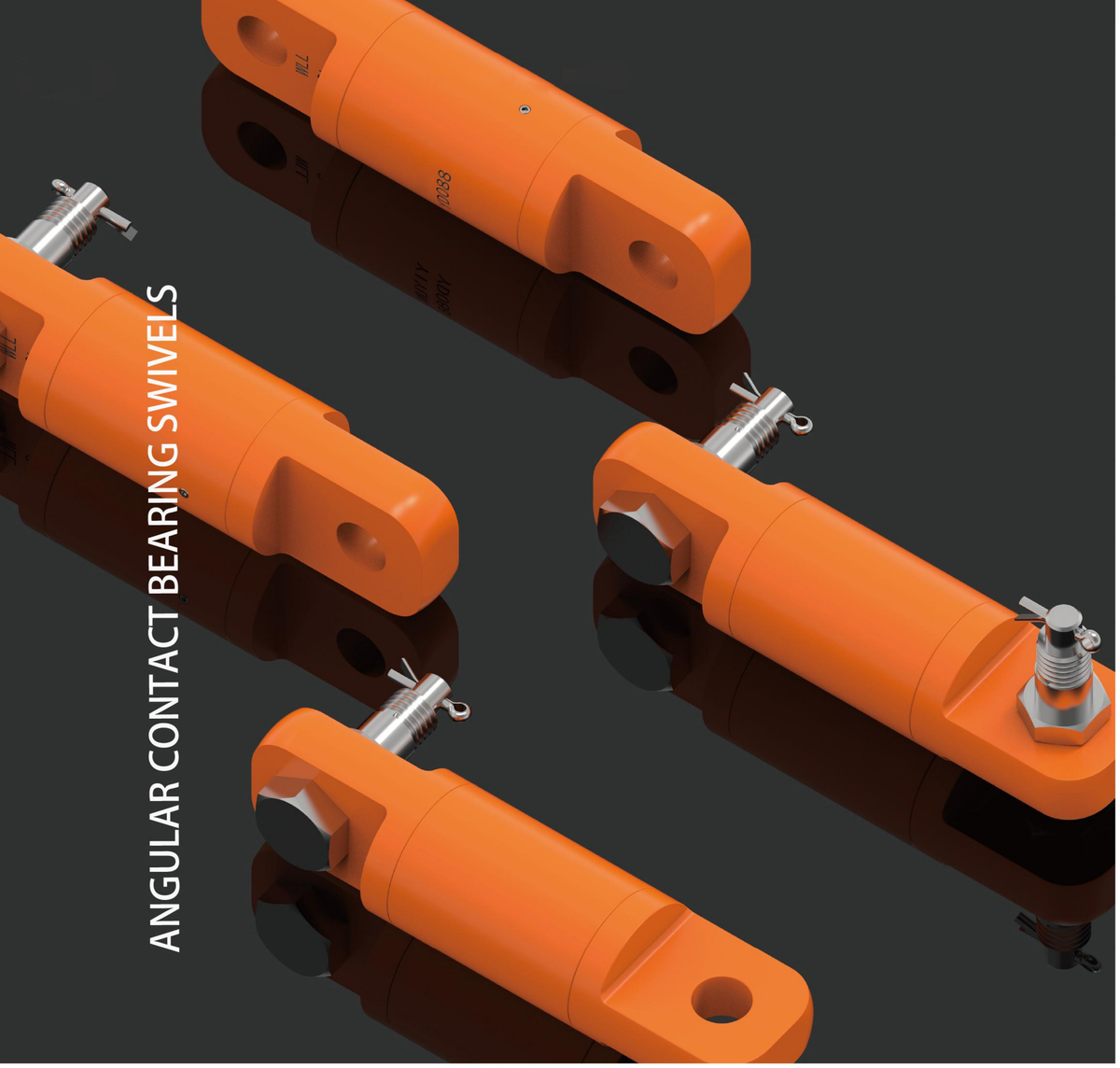

Product Advantage

1. Swivels made of special alloy steel with precision forging, it had high processing performance after special heat treatment process.
2. Built-in grease nozzle for easy maintenance, so that the product has better performance.
3. Working tensile is the same in any direction, safety factor is 4:1
4. The surface is coated with epoxy resin, which prevent surface corrosion effectively.

Angular Contact Bearing Swivels-Bullet Style

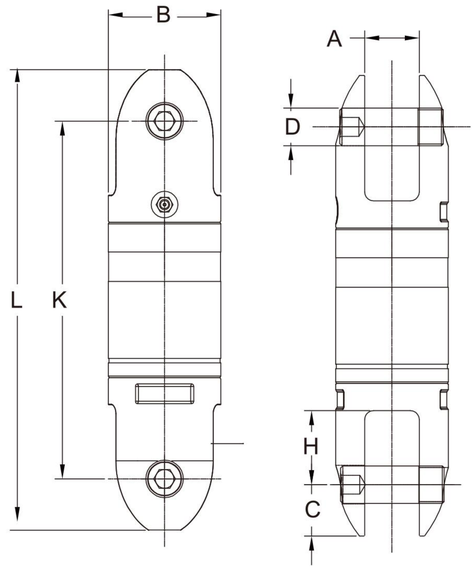

Angular Contat Bearing Swivels-Style

ITEM NO.	SIZE	WLL/T	Dimensions/ mm							Weight Kg
			B	K	L	C	A	D	H	
YD087-007	0.75	0.75	34	102	126	12	15	10	22	0.5
YD087-015	1.5	1.5	40	112	144	16	18	12	26	0.8
YD087-030	3	3	53	158	208	25	23	16	32	2.0
YD087-050	5	5	67	205	267	31	32	22	37	3.9
YD087-085	8.5	8.5	78	250	320	35	37	24	50	6.7
YD087-100	10	10	106	316	408	46	42	38	53	18.6
YD087-150	15	15	119	334	430	48	48	38	56	19.9
YD087-250	25	25	137	403	525	61	62	50	69	36.5
YD087-350	35	35	154	426	548	61	62	50	69	47.6

Angular Contact Bearing Swivels-UU

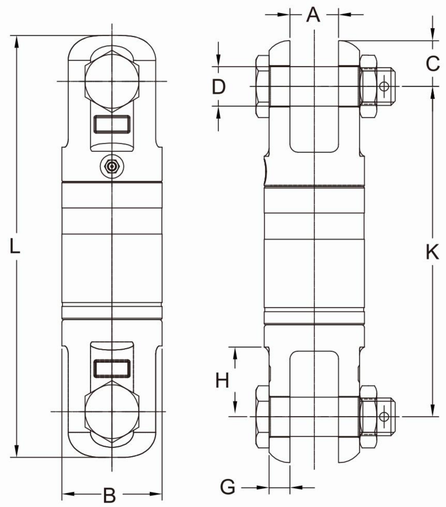

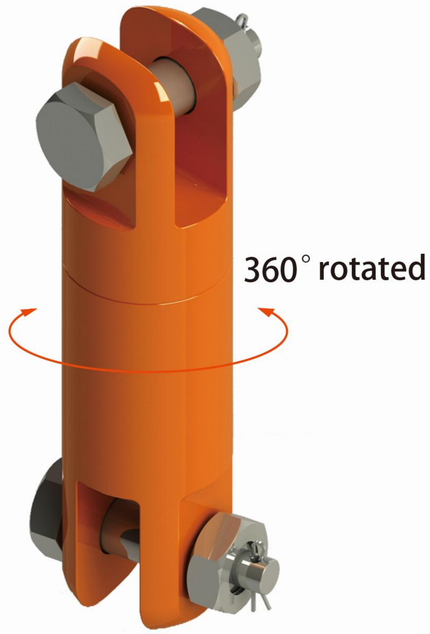

ITEM NO.	SIZE	WLL/T	Dimensions/ mm								Weight
			B	K	L	C	A	D	G	H	Kg
YD086-007	0.75	0.75	34	107	133	13	15	10	6	22	0.5
YD086-015	1.5	1.5	40	119	159	20	18	13	8	26	0.9
YD086-030	3	3	53	160	210	25	23	19	10	32	2.3
YD086-050	5	5	67	203	267	32	32	22	14	37	4.4
YD086-085	8.5	8.5	78	250	326	38	40	30	14	54	7.6
YD086-100	10	10	106	310	410	50	42	38	25	54	19.5
YD086-150	15	15	119	320	440	60	48	38	25	57	21.7
YD086-250	25	25	137	405	535	65	62	50	30	70	39.5
YD086-350	35	35	154	405	535	65	62	50	33	70	46.2
YD086-600	60	60	270	670	890	110	100	80	75	120	352

★ safety factor: 4:1

Angular Contact Bearing Swivels-OU

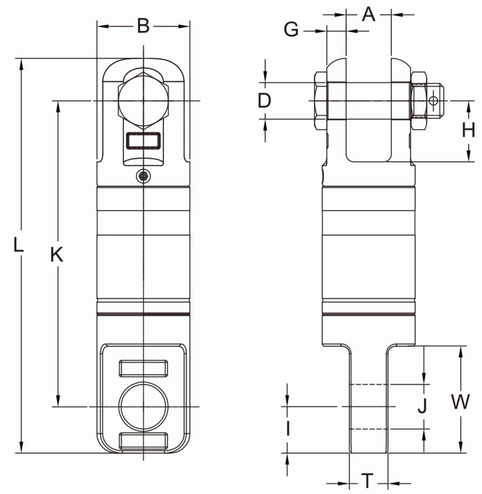

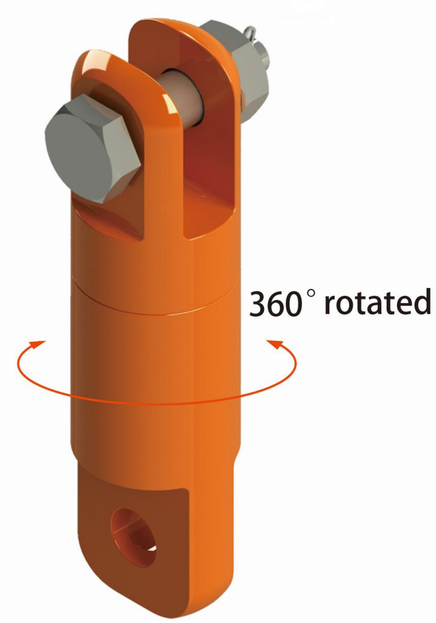

Angular Contat Bearing Swivels-UO

ITEM NO.	SIZE	WLL/T	Dimensions/ mm											Weight
			B	K	L	A	G	D	H	T	J	W	I	Kg
YD089-007	0.75	0.75	34	107	133	15	6	10	22	12	10.5	35	13	0.5
YD089-015	1.5	1.5	40	119	159	18	8	13	26	15	13.5	46	20	0.9
YD089-030	3	3	53	160	210	23	10	19	32	20	20	57	25	2.2
YD089-050	5	5	67	203	267	32	14	22	37	26	33	69	32	4.4
YD089-085	8.5	8.5	78	250	326	40	14	30	54	32	37	92	38	7.4
YD089-100	10	10	106	310	410	42	25	38	54	42	44	104	50	18.0
YD089-150	15	15	119	320	440	48	25	38	57	49	54	117	60	21.2
YD089-250	25	25	137	405	540	62	30	50	70	60	66	140	70	40.0
YD089-350	35	35	154	405	540	62	33	50	70	60	66	140	70	46.7
YD089-600	60	60	270	670	890	100	75	80	120	75	80	230	110	302

★ safety factor: 4:1

Angular Contact Bearing Swivels-OO

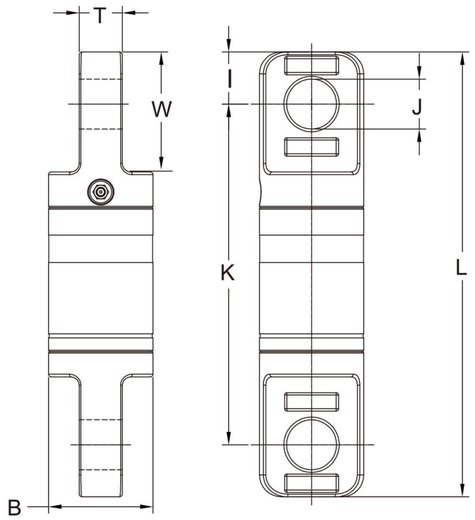

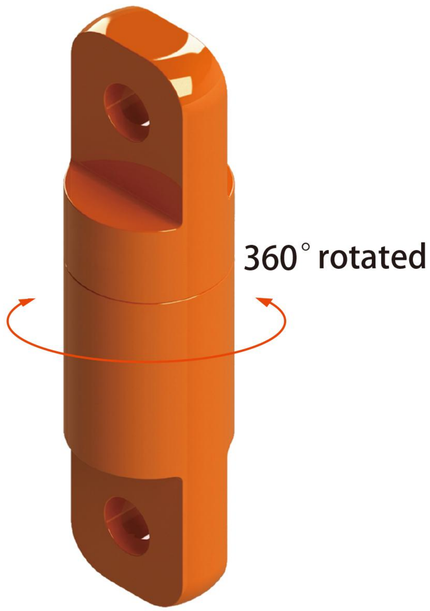

ITEM NO.	SIZE	WLL/T	Dimensions/ mm							Weight Kg
			B	K	L	I	T	J	W	
YD088-007	0.75	0.75	34	107	133	13	12	10.5	35	0.5
YD088-015	1.5	1.5	40	119	159	20	15	13.5	46	0.9
YD088-030	3	3	53	160	210	25	20	20	57	2.1
YD088-050	5	5	67	203	267	32	26	33	69	4.3
YD088-085	8.5	8.5	78	250	326	38	32	37	92	7.3
YD088-100	10	10	106	310	410	50	42	44	104	17.0
YD088-150	15	15	119	320	440	60	49	54	117	21.2
YD088-250	25	25	137	405	545	70	60	66	140	39.0
YD088-350	35	35	154	405	545	70	60	66	140	45.8
YD088-600	60	60	270	670	890	110	75	80	230	253

★ safety factor: 4:1

Concrete Precast Element Lifting

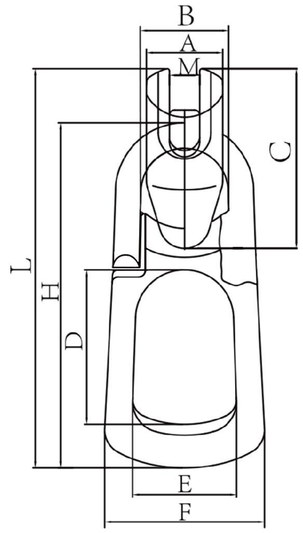

ITEM NO.	WLL/T	Dimensions/ mm									Weight Kg
		A ± 1	B ± 1	C ± 2	D ± 1	E ± 1	F ± 1	H ± 1	M ± 2	L ± 2	
YD095-1-1.3	1.3	33	42	80.4	70.5	45	73	160	11	186	0.89
YD095-1.5-2.5	2.5	41	49	102	85	57	88	188	16	227	1.3
YD095-3-5	5	55	70	133	88	69	110	242	22	282	3.65
YD095-6-10	10	73	92	176	116	83	161	342	30	391	10.01
YD095-12-20	20	110	114.5	224	133.5	107.5	182	437	42	497	20.37
YD095-12-32	32	154	172	307	189	164	272	560	52	661	46.5

★ safety factor: 4:1